ALT.NO	ALT.DATE	ZONE	ALTERATIONS	AUTHORITY
NIL	NIL	NIL	NIL	NIL
M1	20.01.2020	DIM. CHANGED TO 192 WAS 209 mm. ECN No.: 84900166		MGR / VVS

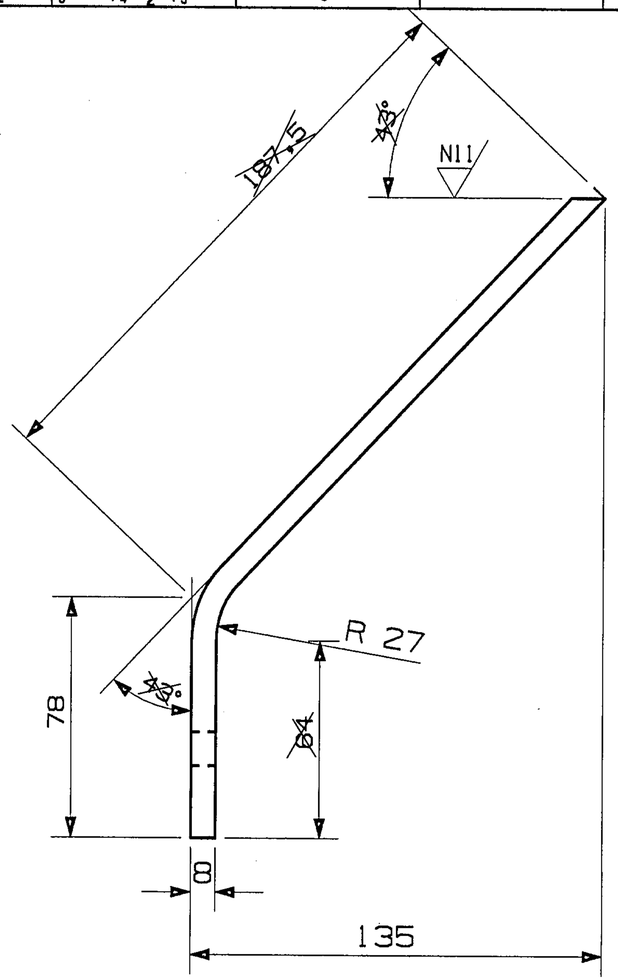

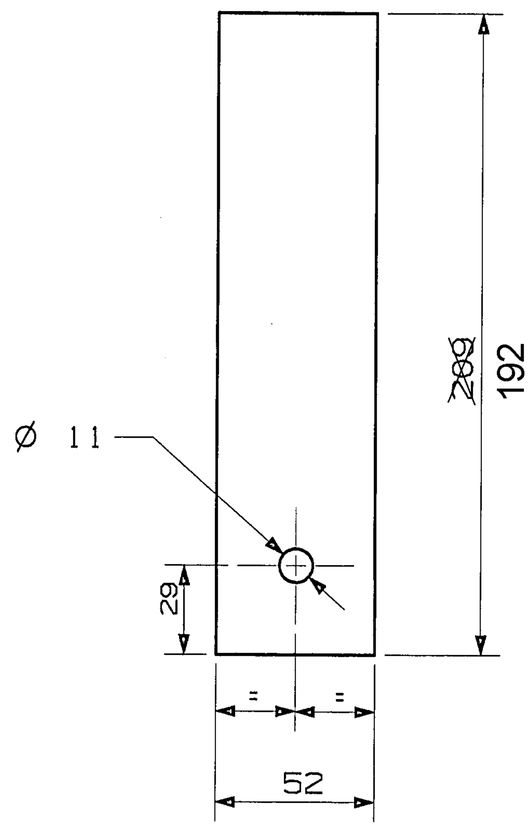

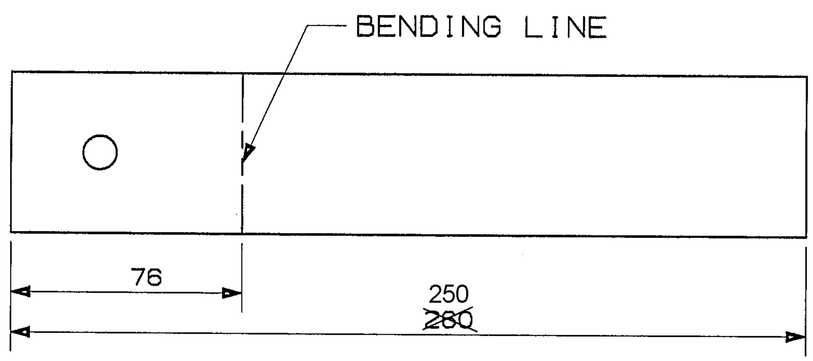

DEVELOPED VIEW

Entered
Date Base

14 MAR 2008

WELD LENGTH	ITEM	DESCRIPTION & DIMENSIONS	QPASSLY	DETAIL DRG	MATL. & SPEC.	REMARKS
	NIL	PLATE 8X52X~~260~~ 250	NIL	R103001008	IS:2062-11 E250 CuC	NIL
NIL M	GROUP	BOGIE FRAME	SUPERSEDES:	NIL		
WEIGHT	FILE	\\Nas\bogie\assly\em03143.prt(3d)				
0.840 KG						
S.AREA 0.030 M²		ANGLE				
LENGTH /~~DIA~~ 0.209 M		RAIL COACH FACTORY, KAPURTHALA				
WIDTH /~~THICK~~ 0.052 M		INDIAN RAILWAYS STANDARD				
HEIGHT 0.135 M		ADE/SME	DY.CME	NR	CDE	

SCALE	1:2
SSB/REC	14/03/08
CHD	ASPR
DRN	RPDS
REF.DRG.NO.	NIL
PL NO.	NIL
DRG.NO.	EM03143 M1
ALT.	NIL
SIZE	A3
SHEET	1/1

DETAIL DRGS STARTING WITH "LI" ARE INTERNAL REFERENCE LISTS ONLY AND ARE NOT FOR ISSUE.
THIS IS A COMPUTER GENERATED DRAWING. ANY MANUAL ALTERATION SHALL AUTOMATICALLY RENDER IT INVALID.
FOR UNTOLERANCED DIMENSIONS REFER MDG0008 | DATE OF FIRST ISSUE 19/01/2008 | CGM BY